JOURNAL OF CLINICAL MICROBIOLOGY, Jan. 2011, p. 34–41 Vol. 49, No. 1
0095-1137/11/$12.00 doi:10.1128/JCM.01329-10
Copyright © 2011, American Society for Microbiology. All Rights Reserved.

Development of a Multilocus Sequence Tool for Typing *Cryptosporidium muris* and *Cryptosporidium andersoni*[▽]

Yaoyu Feng,[1]* Wenli Yang,[2] Una Ryan,[3] Longxian Zhang,[4] Martin Kváč,[5] Břetislav Koudela,[5,6] David Modrý,[5,6] Na Li,[2,7,8] Ronald Fayer,[9] and Lihua Xiao[2]*

State Key Laboratory of Bioreactor Engineering, School of Resource and Environmental Engineering, East China University of Science and Technology, Shanghai 200237, China[1]; Division of Foodborne, Waterborne, and Environmental Diseases, Centers for Disease Control and Prevention, Atlanta, Georgia 30333[2]; Division of Veterinary and Biomedical Sciences, Murdoch University, Murdoch, Western Australia 6150, Australia[3]; College of Animal Science and Veterinary Medicine, Henan Agricultural University, Zhengzhou 450002, China[4]; Biology Centre of the Academy of Sciences of the Czech Republic, Branišovská 31, 370 05 České Budějovice, Czech Republic[5]; Department of Parasitology, University of Veterinary and Pharmaceutical Sciences, 612 42 Brno, Czech Republic[6]; School of Life Science and Technology, Tongji University, Shanghai 200295, China[7]; Atlanta Research and Education Foundation, 1670 Clairmont Road, Decatur, Georgia 30033[8]; and Beltsville Agricultural Research Center, Agricultural Research Service, U.S. Department of Agriculture, Beltsville, Maryland 20705[9]

Received 30 June 2010/Returned for modification 24 August 2010/Accepted 16 October 2010

Although widely used for the characterization of the transmission of intestinal *Cryptosporidium* spp., genotyping tools are not available for *C. muris* and *C. andersoni*, two of the most common gastric *Cryptosporidium* spp. infecting mammals. In this study, we screened the *C. muris* whole-genome sequencing data for microsatellite and minisatellite sequences. Among the 13 potential loci (6 microsatellite and 7 minisatellite loci) evaluated by PCR and DNA sequencing, 4 were eventually chosen. DNA sequence analyses of 27 *C. muris* and 17 *C. andersoni* DNA preparations showed the presence of 5 to 10 subtypes of *C. muris* and 1 to 4 subtypes of *C. andersoni* at each locus. Altogether, 11 *C. muris* and 7 *C. andersoni* multilocus sequence typing (MLST) subtypes were detected among the 16 *C. muris* and 12 *C. andersoni* specimens successfully sequenced at all four loci. In all analyses, the *C. muris* isolate (TS03) that originated from an East African mole rat differed significantly from other *C. muris* isolates, approaching the extent of genetic differences between *C. muris* and *C. andersoni*. Thus, an MLST technique was developed for the high-resolution typing of *C. muris* and *C. andersoni*. It should be useful for the characterization of the population genetics and transmission of gastric *Cryptosporidium* spp.

Cryptosporidium muris and *Cryptosporidium andersoni* are gastric *Cryptosporidium* species of various mammals. *Cryptosporidium muris* was first identified in the gastric glands of mice over a century ago, whereas *C. andersoni* was long considered *C. muris* because of the genetic and biological similarity between the two and was only recently established as a separate species (25, 42). *Cryptosporidium muris* is well known to have broad host specificity. In addition to various rodent species, natural *C. muris* infections have been documented for pigs, Bactrian camels, giraffes, dogs, cats, nonhuman primates, seals, bilbies, and tawny frogmouth (3, 16, 17, 20, 22, 26, 27, 29, 32, 34, 37, 38, 40, 44). In contrast, *C. andersoni* is mostly a parasite of cattle, having been found only occasionally in other animals such as Bactrian camels, sheep, and goats. In recent years, *C. muris* or *C. andersoni* infection has been reported in a few human cases (1, 8, 11, 13, 15, 19, 24, 30, 31, 33, 39). Thus, both *C. muris* and *C. andersoni* are considered zoonotic *Cryptosporidium* species. Because of its biological uniqueness and zoonotic potential, the complete genome of *C. muris* is being sequenced.

Recently, various molecular diagnostic tools have been used for the characterization of the transmission of human-pathogenic intestinal *Cryptosporidium* spp. such as *C. hominis* and *C. parvum* (35, 41). These tools have proven to be especially useful for comparisons of parasite population genetics among hosts or *Cryptosporidium* species, characterization of host specificity of *Cryptosporidium* spp., identification of infection sources in humans, tracking of the temporal and geographical spread of pathogens, and investigation of outbreaks and endemicity. One such high-resolution subtyping tool is multilocus sequence typing (MLST). For *C. hominis* and *C. parvum*, MLST tools have recently been developed using the polymorphic microsatellite and minisatellite markers identified in the recently published whole-genome sequencing data (9, 10, 12).

In this study, we screened the *C. muris* genome for microsatellite and minisatellite sequences and developed an MLST technique for the high-resolution typing of *C. muris* and *C. andersoni* isolated from humans and various animals.

MATERIALS AND METHODS

***Cryptosporidium* specimens.** A total of 27 DNA extractions from 25 *C. muris* specimens and 17 extractions from 17 *C. andersoni* specimens were used in the study (Table 1). The *C. muris* specimens were from humans, various rodents,

* Corresponding author. Mailing address for Yaoyu Feng: School of Resource and Environmental Engineering, East China University of Science and Technology, Shanghai, China. Phone and fax: 86-21-6425-0664. E-mail: yyfeng@ecust.edu.cn. Mailing address for Lihua Xiao: Division of Foodborne, Waterborne, and Environmental Diseases, National Center for Emerging and Zoonotic Infectious Diseases, Centers for Disease Control and Prevention, 1600 Clifton Road, Atlanta, GA 30333. Phone: (404) 718-4161. Fax: (404) 718-4197. E-mail: lxiao@cdc.gov.

▽ Published ahead of print on 27 October 2010.

Downloaded from http://jcm.asm.org/ on December 18, 2020 at University of North Texas Libraries

TABLE 1. Specimens used in the study and their subtype identity at the four selected microsatellite and minisatellite loci

Specimen	Species	Host	Location and/or source	MLST subtype[b]				Reference
				MS1	MS2	MS3	MS16	
Reference[a]	*C. muris*	RN66	Japan	M5	M4	M1	M5	18
6853	*C. muris*	Human	Lima, Peru	M1	M2	M4	M5	33
9412	*C. muris*	Human	Nairobi, Kenya	Noisy	—	—	—	13
14713	*C. muris*	Human (same as 9412)	Nairobi, Kenya	M6	M4	—	M2	13
14714	*C. muris*	Human (same as 9412)	Nairobi, Kenya	M6	M4	M1	M2	13
13460	*C. muris*	Camel via mice	Primary passage in Giza, Egypt	M5	M4	M2	M3	This study
13461	*C. muris*	Dog via mice	Primary passage in Giza, Egypt	M5	M4	M2	M3	This study
7379	*C. muris*	Domestic mouse	Mouse breeder in Vyškov, Czech Republic	M7	M4	M2	M1	This study
1666	*C. muris*	Siberian chipmunk (Eutamius sibiricus)	Imported into Czech Republic from Southeast Asia	M7	M4	M1	M5	17
7380	*C. muris*	Mara (*Dolichotis patagonum*)	Born in a zoo in Plzeň, Czech Republic	M9	M4	M1	M1	This study
7511	*C. muris*	Bactrian camel	Born in a zoo in Plzeň, Czech Republic	M1	M1	M4	M5	This study
7512	*C. muris*	Mountain goat (*Oreamnos americanus*)	Born in a zoo in Plzeň, Czech Republic	M8	M4	M2	M4	This study
14242	*C. muris*	Bactrian camel via *Mastomys coucha*	14th passage of isolate 7511 in Czech Republic	M10	M6	M5	M6	23
14243	*C. muris*	RN66 via SCID mice	10th passage in Czech Republic of oocyst from Waterborne, Inc.	M10	M6	M5	M6	23
14260	*C. muris*	*Tachyoryctes splendens* via *Mastomys coucha*	14th passage in Czech Republic of oocysts from wild *Tachyoryctes splendens* in Kakamega, Kenya	M10	M6	M5	M6	23
14272	*C. muris*	Giraffe (*Giraffa camelopardalis reticulate*)	Born in a zoo in Dvůr Králové nad Labem, Czech Republic	—	—	—	—	20
14905	*C. muris*	Tawny frogmouth, *Podargus strigoides* (CZ-B2-2)	Zoo in Prague, Czech Republic	M1	M3	—	Noisy	36
14906	*C. muris*	Laboratory mouse (CZ-B2-11)	Prague, Czech Republic	M6	M4	M2	M4	36
14907	*C. muris*	Yellow rat snake, *Elaphe obsolete quadrivittata* (CZ-B2-17)	Zoo in Prague, Czech Republic	M2	M2	M3	M5	36
14908	*C. muris*	Laboratory mouse (CZ-B3-5)	Prague, Czech Republic	—	—	—	M5	This study
14910	*C. muris*	Laboratory mouse (CZ-B3-8)	Prague, Czech Republic	M1	M4	—	Noisy	This study
14911	*C. muris*	Laboratory mouse (CZ-B4-11)	Prague, Czech Republic	M1	M2	M4	M5	This study
14913	*C. muris*	Cat (CZ-B6-2)	Prague, Czech Republic	M3	M4	—	M1	34
14914	*C. muris*	Laboratory mouse (CZ-B6-6)	Prague, Czech Republic	M9	M4	M1	M1	This study
14915	*C. muris*	Rat (CZ-B6-18)	Prague, Czech Republic	Noisy	Noisy	M2	M1	This study
14916	*C. muris*	Laboratory mouse (CZ-B6-26)	Prague, Czech Republic	M4	M4	—	M5	This study
14917	*C. muris*	Laboratory mouse (CZ-B6-27)	Prague, Czech Republic	Noisy	M4	—	M5	This study
14919	*C. muris*	Prevost's squirrel (*Callosciurus prevostii*; CZ-B6-86)	Zoo in Prague, Czech Republic	M4	M4	—	M5	This study
590 (M356)	*C. andersoni*	Cattle	Calgary, Canada	A2	A3	A4	A1	29
14934	*C. andersoni*	Cattle	Henan, China	A1	A2	A4	A1	This study
14937	*C. andersoni*	Cattle	Henan, China	A1	A2	A4	A1	This study
14939	*C. andersoni*	Cattle	Henan, China	A2	A1	A3	A1	This study
14942	*C. andersoni*	Cattle	Henan, China	A2	A1	A2	A1	This study
14943	*C. andersoni*	Cattle	Henan, China	A2	A1	A2	A1	This study
14944	*C. andersoni*	Cattle	Henan, China	A2	Noisy	A2	—	This study
14945	*C. andersoni*	Cattle	Henan, China	A1	—	A4	—	This study
14948	*C. andersoni*	Cattle	Henan, China	A1	A2	A4	A1	This study
845	*C. andersoni*	Cattle	Sumava Mountains, Czech Republic	A2	A3	A4	A1	21
14237	*C. andersoni*	Cattle	Ceske Budejovice, Czech Republic	A1	A3	A4	A1	This study
1808	*C. andersoni*	Cattle	Indiana	A2	A3	A1	A1	This study
1809	*C. andersoni*	Cattle	Indiana	A2	A3	A4	A1	This study
11084	*C. andersoni*	Cattle	Georgia	A2	A3	—	—	7
14857	*C. andersoni*	Cattle	North Carolina	A2	A3	A2	A1	4
14860	*C. andersoni*	Cattle	New York	A2	—	—	—	5
14862	*C. andersoni*	Cattle	Pennsylvania	—	—	Noisy	A1	5

[a] Reference sequences from RN66 were obtained from the *C. muris* whole-genome sequencing project.
[b] MS1, coding for the hypothetical protein CMU_036310 (GenBank accession no. XM_002141771); MS2, coding for the 90-kDa heat shock protein (accession no. XM_002141007); MS3, coding for the hypothetical protein CMU_020660 (accession no. XM_002142635); MS16, coding for the leucine-rich repeat family protein CMU_035650 (accession no. XM_002141705). Dashes indicate no PCR amplification.

Bactrian camels, and one mountain goat, snake, dog, cat, and tawny frogmouth each in the Czech Republic, Egypt, Kenya, and Peru. In contrast, all *C. andersoni* specimens were from cattle in the United States, Canada, the Czech Republic, and China. A few of the isolates were maintained in laboratory rodents (mice, SCID mice, and *Mastomys coucha*) (Table 1). Prior to experimental infection, these animals were maintained in breeding facilities designed for experimental animals and determined to be free of *Cryptosporidium* infection by microscopy of consecutive fecal samples and, in the case of SCID mice and *Mastomys coucha*, by PCR analysis. Three of the DNA preparations were from the same *C. muris* specimen from a child in Kenya, extracted at different storage times. These specimens were diagnosed as being positive for *C. muris* or *C. andersoni* by DNA sequence analysis of an ~830-bp fragment of the small-subunit (SSU) rRNA gene (43). Seven *C. muris* DNA preparations (preparations 6853, 7379, 9412, 14260, 14272, 14713, and 14714) and two *C. andersoni* preparations (preparations 1808 and 11084) were used for initial primer evaluations and the selection of markers. These DNA extractions were chosen for the initial screening of PCR primers and targets because of their various efficiencies of amplification at the SSU rRNA locus, with DNAs 9412 and 14272 producing amplification in only 1 of 3 PCR runs. The remaining specimens were analyzed only at the selected microsatellite and minisatellite loci.

Microsatellite and minisatellite identification. A search for microsatellite and minisatellite sequences in the *C. muris* genome was conducted on 8 March 2007. The first 2,500 sequences (traces 1649410657 to 1649413156) in the *C. muris* whole-genome sequencing database were retrieved from the website of the In-

Downloaded from http://jcm.asm.org/ on December 18, 2020 at University of North Texas Libraries

stitute for Genomic Research (TIGR, now the J. Craig Venter Institute [http://gsc.jcvi.org/projects/msc/Cryptosporidium_muris/). Microsatellite and minisatellite sequences in the retrieved sequences were identified by using the software Tandem Repeat Finder (http://tandem.bu.edu/trf/trf.html).

PCR analysis. Nested PCR was used for the amplification of microsatellite and minisatellite targets. Primary and secondary PCR primers were designed based on nucleotide sequences of the potential microsatellite and minisatellite loci. The potential targets were amplified by nested PCR, using 1 μl of DNA in the primary PCR and 2 μl of primary PCR products in the secondary PCR. For both the primary and secondary PCRs, the PCR mixture consisted of 200 mM (each) deoxynucleotide triphosphate, 1× PCR buffer (Perkin-Elmer, Foster City, CA), 3.0 mM $MgCl_2$, 5.0 U of *Taq* polymerase (Promega, Madison, WI), and 100 nM primers in a total volume of 100 μl. The reactions were performed with a GeneAmp PCR 9700 thermocycler (Perkin-Elmer) for 35 cycles of 94°C for 45 s, the annealing temperatures specified in Table 2 for 45 s, and 72°C for 60 s, with an initial denaturation step (94°C for 5 min) and a final extension step (72°C for 10 min). To neutralize PCR inhibitors, 400 ng/μl of nonacetylated bovine serum albumin (Sigma-Aldrich, St. Louis, MO) was used in the primary PCR. The secondary PCR products were detected by agarose gel electrophoresis and ethidium bromide staining.

Sequence analysis. The secondary PCR products were sequenced in both directions with an ABI 3130 genetic analyzer (Applied Biosystems, Foster City, CA) using the secondary primers and the BigDye1 Terminator V3.1 cycle sequencing kit (Applied Biosystems). The sequences obtained were aligned with each other and reference sequences downloaded from the *C. muris* whole-genome database using ClustalX (http://www.clustal.org/). To assess the genetic relatedness of various *C. muris* and *C. andersoni* subtypes, neighbor-joining trees were constructed by using the program TreeconW (http://bioinformatics.psb.ugent.be/software/details/3), based on the evolutionary distances calculated by the Kimura two-parameter model.

Nucleotide sequence accession numbers. Unique sequences generated in this study have been deposited in the GenBank database under accession numbers HM565066 to HM565101.

RESULTS

Identification of microsatellite and minisatellite sequences in the *C. muris* genome. The search for tandem repeats in the 2,500 short sequences retrieved from the *C. muris* whole-genome sequencing project identified 101 sequences with microsatellites and minisatellites. Based on the nature (largely an absence of imperfect repeats) and length (>6 copies for minisatellite targets and >10 copies for microsatellite targets) of the repeats and the availability of suitable sequences for primer design (excluding those with short or AT-rich 5′- or 3′-flanking nucleotide sequences), 13 loci were chosen from the 101 potential targets, including 6 microsatellite loci and 7 minisatellite loci. The location of the loci was not considered, as the *C. muris* genome was not assembled and annotated at the execution of the study. Primers for nested PCR were designed for each locus (Table 2). Because DNA sequencing rather than fragment length measurement was used for the determination of polymorphism, the final PCR product was larger than that normally used for microsatellite and minisatellite analysis, with expected PCR products ranging from 307 bp to 751 bp.

Initial evaluation of the amplification efficiency. The amplification efficiency of the 13 sets of nested PCR primers was initially evaluated by using seven *C. muris* DNA preparations (preparations 6853, 7379, 9412, 14260, 14272, 14713, and 14714) and two *C. andersoni* DNA preparations (preparations 1808 and 11084) (Fig. 1). The primers of three loci (CM-MS8, CM-MS13, and CM-MS14) did not produce the expected PCR products. Primers of the remaining loci produced the expected PCR products for 2 to 8 of the DNA preparations used in the analysis, with one locus (CM-MS6) generating only light bands in gel electrophoresis analyses of the PCR products (Fig. 1, Table 2). DNA preparations 9412 (except for MS1 and MS16) and 14272 (except for MS18) were not amplified at most loci. Positive PCR products of the amplified loci were sequenced mostly successfully, with the exception of two loci, CM-MS12 and CM-MS18, which produced unreadable sequences with numerous underlying signals in the electropherogram.

Amplification efficiency of the selected genetic loci. Four loci, CM-MS1, CM-MS2, CM-MS3, and CM-MS16, were chosen for sequence polymorphism evaluations using a total of 44 DNA extractions from *C. muris* and *C. andersoni* specimens. Of these, 41, 39, 24, and 38 DNA preparations were amplified at the CM-MS1, CM-MS2, CM-MS3, and CM-MS16 loci, respectively (Table 1). These PCR products were sequenced successfully, except for 2 to 3 DNA preparations at each locus, which produced mixed signals in electropherograms. The nucleotide sequences generated at each locus were homologous to those downloaded from the database of the *C. muris* whole-genome sequencing project. A BLAST analysis of the CM-MS3 sequences against the GenBank sequence database identified three sequencing errors in the primary reverse primer (CM-MS3-R1) designed based on initial sequences obtained from TIGR project database. A replacement primer (CM-MS3-R1r) was then designed, which led to the PCR amplification of nine additional DNA preparations at the CM-MS3 locus.

Genetic relatedness among *C. muris* and *C. andersoni* subtypes. Multiple-sequence alignment analysis of the acquired sequences grouped the parasites into three groups at each of the four loci under analysis. One major group was formed by most *C. muris* specimens, including the *C. muris* reference sequence; one group (referred to hereafter as the *C. muris* variant) was formed by three Czech *C. muris* specimens, 14242, 14243, and 14260; and one was formed by *C. andersoni*. The formation of the three sequence groups was supported by results of phylogenetic analyses, as three distinct groups were seen in neighbor-joining trees constructed with the sequences (Fig. 2).

Nature of polymorphism in microsatellite and minisatellite sequences. The three groups of parasites identified differed from each other by having numerous nucleotide substitutions in the nonrepeat region. Within each group, sequences differed from each other only in the number of microsatellite and minisatellite repeats. As the microsatellite and minisatellite repeats occurred in the coding region of the genes, the insertions and deletions were always in trinucleotides. The only exceptions were reference sequences of *C. muris* from the genome sequencing project, which differed in the nonrepeat region (by single-nucleotide deletions/insertions and substitutions) from the *C. muris* sequences acquired in this project at three of the four loci: CM-MS2, CM-MS3, and CM-MS16. These nucleotide deletions, insertions, and substitutions, however, were likely due to sequencing errors, as indicated by a comparison of the original reference sequences retrieved from the *C. muris* genome sequence project website and their respective sequences (GenBank accession no. XM_002141771 for CM-MS1, XM_002141007 for CM-MS2, XM_002142635 for CM-MS3, and XM_002141705 for CM-MS16) recently downloaded from the GenBank database.

The three groups of parasites further differed from each other in the nature of microsatellite and minisatellite re-

Downloaded from http://jcm.asm.org/ on December 18, 2020 at University of North Texas Libraries

TABLE 2. Primer sequences and amplification efficiencies of microsatellite and minisatellite loci selected for evaluations

Locus	Trace	Targeted repeat(s)[a]	Primer sequence (5′–3′)	Annealing temp (°C)	Expected size (bp)	Amplification efficiency (no. of amplified samples/ total no. of samples)[b]
CM-MS1	1649410765	$(GAACGAGATAGG)_{15}$	ACCATCTAGAGATAACGAGCGA (F1) GAATCAGAAGATGAGCGACAA (R1) CGTGATAGTGGGTATGAATTGGACA (F2) CGACTGCGATACTCACGTCCT (R2)	55 55	550	8/9
CM-MS2 (HSP90)	1649411347	$(CCATATCCC)_6$	TTGCAACTGTACCTAAATTAGTA (F1) GTGAGACTTCTGGGGTCCTGA (R1) TCATGACGCGTCATACCAACA (F2) ACTTAGACAGTTCTATGCTGA (R2)	55 52	457	7/9
CM-MS3	1649411585	$(TGTTGG)_9$ and $(GCTGCA)_6$	AACCAAGTGAATCACGAACTT (F1) TTGCTTTAAGTGTAGAGCATACAA (R1) TCAAGTACAGCAGTCTATTGCTT (R1r) GCAATATCTTCGACGATCCCA (F2) ATGGGAATAATTCTTCATCATCAA (R2)	55 55	536	4/9
CM-MS4	1649411639	$(ATC)_{73}$	GTTGGCTGCATCTATGTT (F1) TATACTTGATGATGTACTGGAT (R1) TGTGGTGGAGTTGTAATTAGGA (F2) TAGATGGTGACTCAGATTCTT (R2)	48 55	676	2/9
CM-MS6	1649411735	$(AATGCAGATACAAGTATC)_{11}$	TCTCTTTCCAACTCGATGCTT (F1) ACCAAGAGTGATATTCATTCCTCT (R1) GACTTACAATCAGATGGATACAGC (F2) TCTGTTCCTTGGTAAGTGGGCTGT (R2)	55 58	751	4/9 (weakbands)
CM-MS8	1649411889	$(AT)_{44}$	GCAACGTGACATGGATGGA (F1) CGCTAGAGTCAAGAGTCAT (R1) TTGTGGAGATAAATTAACAAACA (F2) CTCATCATCTGAAGTTGACAA (R2)	52 52	307	0/7
CM-MS11	1649412113	$(AT)_{21}$	AGTCTTCATCATCTGGATATAGCA (F1) GCTTTAGATTCTCGTACTATCA (R1) ATCTAGAACAGTTCCCATTACCA (F2) AATGATGTCGAGTTAGCTAAA (R2)	55 52	467	2/9
CM-MS12 (intergenic)	1649412180	$(TTTATTTT)_6$	CTTGAAGGTTTAGAACCGGGA (F1) TTCGTGAAGGTACTTCATATG (R1) GGATCAATCCAAGTGAGTTCT (F2) CTCACATTGATATGGCTGGTT (R2)	52 55	450	6/9[c]
CM-MS13	1649412266	$(TA)_{21}$	GGACCACATGATAAAGAGCCA (F1) TTGCGCTCTTGGGAAAGGTT (R1) GACTTAGCAGATATAACTGGT (F2) CTCGCGCATGCATCAATGCAA (R2)	55 52	579	0/9
CM-MS14	1649412309	$(GTAGTAGTT)_7$ and $(GTTGTAGTAGTA)_{11}$	GTACCATCAGCTCCTATAGGA (F1) GATCTGGCAGATCCAATTCAT (R1) GGATCTTGCCAAATCACTTCT (F2) CTATCCTATAAGAGGTGATGTACT (R2)	55 55	764	0/9
CM-MS16	1649412803	$(CTTCTTCAT)_9$	GAAGAGGTCGAAGTTAAGCTA (F1) GACAATCATCTAAATCGTGTT (R1) AAGTTTCATCTAGGTACACTAAGA (F2) CACTACCTAATCTCGTGTACTT (R2)	50 55	597	7/9
CM-MS17	1649413150	$(CTCGTTCCCTAT)_{15}$	TCACTTGACTGCGATCTC (F1) GTTCTTCAAGGTCCAGATCTCCTT (R1) TACCCTAAGGAATAACGATCA (F2) ATGAGAAGTATCGCTCTTATGGCT (R2)	50 52	532	2/9
CM-MS18	1649412657	$(TA)_{15}$	AGAGCCATCAGTACCACTGTT (F1) TCGATTGGCCTTACCGGTGCA (R1) CAGCTGTTCCAGAACCACTTGA (F2) CCAACAGACATAGACATGCTT (R2)	55 55	590	8/9[c]

[a] Tandem repeat identified in the sequence of the *C. muris* whole-genome sequencing project.
[b] Seven *C. muris* specimens (specimens 6853, 7379, 9412, 14260, 14272, 14713, and 14714) and two *C. andersoni* specimens (specimens 1808 and 11084) were used in initial primer evaluations. Specimens 9412 (except for MS1 and MM16) and 14272 (except for MS18) were not amplified at most loci.
[c] Noisy at sequencing.

Downloaded from http://jcm.asm.org/ on December 18, 2020 at University of North Texas Libraries

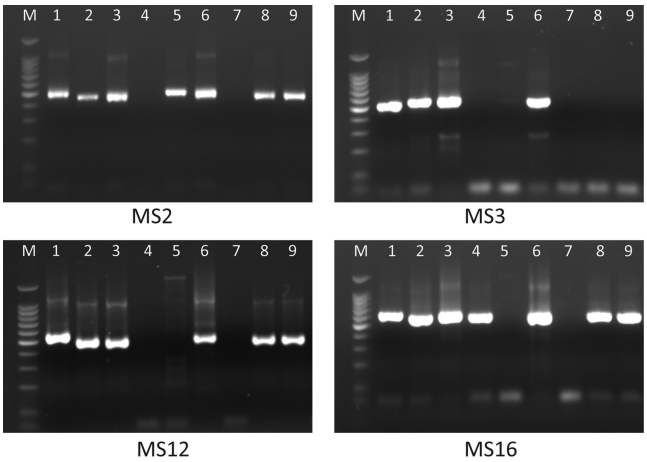

FIG. 1. PCR amplification of *C. muris* and *C. andersoni* DNA at four of the microsatellite and minisatellite loci (MS2, MS3, MS12, and MS16). M, 100-bp molecular markers. Lanes 1 to 9, DNAs 1808 (*C. andersoni*), 6853 (*C. muris*), 7379 (*C. muris*), 9412 (*C. muris*), 11084 (*C. andersoni*), 14260 (*C. muris* variant), 14272 (*C. muris*), 14713 (*C. muris*), and 14714 (*C. muris*), respectively.

peats at each locus. With the exception of CM-MS16, the *C. muris* variant had repeat sequences different from those of *C. andersoni* and *C. muris*. *Cryptosporidium andersoni* also had repeat sequences different from those of *C. muris* at the CM-MS2 and CM-MS3 loci. Sometimes, the difference was just a slight modification of the repeat, such as one of the two minisatellite regions in the *C. muris* variant at the CM-MS1 locus, whereas sometimes the repeat sequences were totally different, such as those at the CM-MS3 locus (Table 3).

Multilocus sequence subtypes. Altogether, there were 10, 5, 5, and 6 subtypes for *C. muris* and 2, 3, 4, and 1 subtypes for *C. andersoni* at the CM-MS1, CM-MS2, CM-MS3, and CM-MS16 loci, respectively (Table 1). A total of 16 *C. muris* specimens and 12 *C. andersoni* specimens were subtyped successfully at all four genetic loci, forming 11 *C. muris* and 7 *C. andersoni* multilocus sequence typing (MLST) subtypes. Most of the MLST subtypes had only one specimen, with the exception of four *C. muris* MLST subtypes and three *C. andersoni* MLST subtypes, which had two or three specimens (Table 1). A neighbor-joining tree was constructed with concatenated sequences from the four genes. The tree topology obtained was identical to that obtained with sequences from individual loci, with the formation of three distinct groups (Fig. 3).

DISCUSSION

In this study, an MLST tool targeting microsatellite and minisatellite sequences was developed for *C. muris* and *C. andersoni*. This tool allowed the identification of at least 11 MLST subtypes of *C. muris* and 7 MLST subtypes of *C. andersoni*. Unlike what was previously observed for *C. hominis* and *C. parvum* (9, 10, 12), the sequence polymorphism in *C. muris* and *C. andersoni* was largely in the form of differences in the copy numbers of the microsatellite and minisatellite repeats. In contrast, both *C. hominis* and *C. parvum* have extensive single-nucleotide substitutions in the nonrepeat regions of most microsatellite and minisatellite targets. The coding nature of the targets was probably not responsible for the differences observed between the gastric and intestinal *Cryptosporidium* spp., as most microsatellites and minisatellites in *Cryptosporidium* occur in coding regions of protein genes because of the presence of few introns and short intergenic regions as the result of a compact genome. This difference might be a reflection of intrinsic biological and genetic differences between gastric and intestinal *Cryptosporidium* species, as indicated by previous data on the phylogenetic relationships and G/C contents of the SSU rRNA genes between the two groups of *Cryptosporidium* spp. (42).

Two groups of *C. muris* were identified in this study. Most *C. muris* specimens had sequences similar to each other at the four genetic loci examined, with differences only in the copy number of microsatellite and minisatellite repeats. They formed a cluster in the phylogenetic analysis. In contrast, three *C. muris* isolates from the Czech Republic, including an isolate (TS03) that originated from an East African mole rat (*Tachyoryctes splendens*) and was maintained in *Mastomys coucha*, had sequences very different from those of most *C. muris* specimens. This isolate was previously shown to have different infectivity and/or host specificity in experimental animal models (23). It was also shown previously that the East African mole rat *C. muris* isolate had sequence differences in the SSU rRNA gene that were comparable to those between *C. andersoni* and most *C. muris* isolate. Surprisingly, two other *C. muris* isolates maintained in laboratory animals by the same research group, RN66 and Bactrian camel isolate CB03, also had sequences identical to those of the East African mole rat *C. muris* isolate. The genetic similarity of the three *C. muris* isolates was also confirmed by the sequencing of the SSU rRNA gene, which produced sequences identical to the one from the East African mole rat isolate. A contamination of *C. muris* isolates could have happened during the animal passage of *C. muris* isolates RN66 and CB03. The substantial sequence differences between the *C. muris* East African mole rat isolate and other *C. muris* isolates in the SSU rRNA gene and four loci in this study indicate that the East African mole rat isolate could present a different species. A parasite identical to the *C. muris* East African mole rat isolate was previously identified in an eastern gray squirrel in New York (6), suggesting that this parasite is probably widespread. A *C. muris* isolate from Japanese field mice was also shown to have minor differences in mouse infectivity and the sequence of the SSU rRNA gene from other *C. muris* isolates (16). Thus, genetic and biological diversities exist in *C. muris*, and with the inclusion of more genetic loci and samples from a wide range of hosts and geographical areas, the MLST approach developed in this study should be useful in elucidating the genetic basis for the difference in host specificity among *C. muris* isolates and in examining the spread of the parasite in geographically isolated areas such as the continent of Australia.

The genetic diversity of *C. andersoni* appears to be much lower than that of *C. muris*. Only three of the four loci examined in this study were polymorphic in *C. andersoni*, and only 2 to 4 subtypes of *C. andersoni* were seen at each polymorphic locus. The low genetic diversity of *C. andersoni* in comparison with that of *C. muris* is expected, as the domestication of cattle is a recent event. Thus, modern

Downloaded from http://jcm.asm.org/ on December 18, 2020 at University of North Texas Libraries

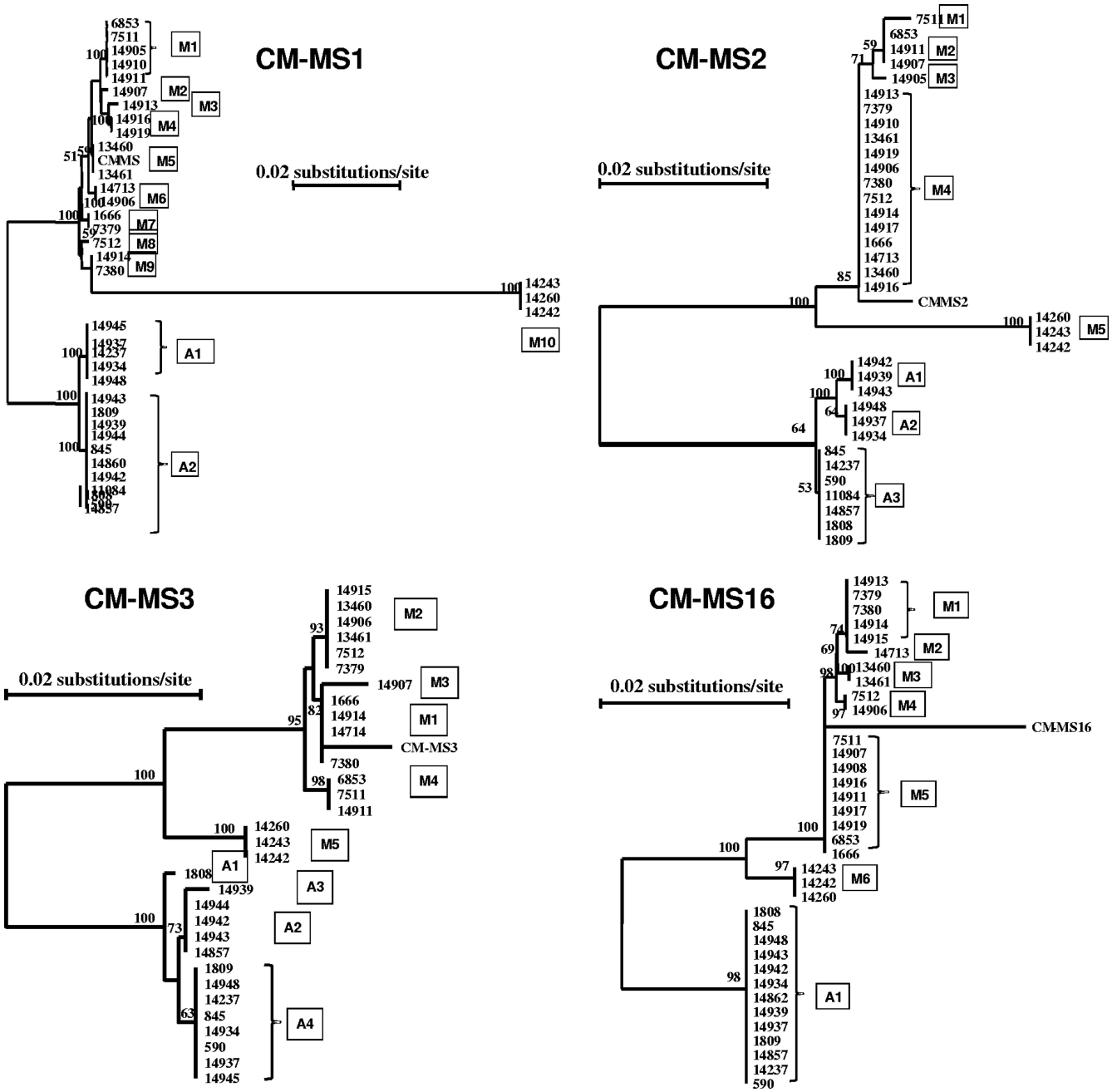

FIG. 2. Phylogenetic relationships among subtypes of *C. muris*, the *C. muris* variant, and *C. andersoni* at four microsatellite and minisatellite loci (MS1, MS2, MS3, and MS16) as assessed by a neighbor-joining analysis of the nucleotide sequences, using distance calculated by the Kimura two-parameter model. CM-MS1, CM-MS2, CM-MS3, and CM-MS4 are reference sequences from the whole-genome sequencing project.

cattle are thought to have originated from a few places in the Near East and Europe and introduced to the rest of the world during the last 15,000 years (2, 14). The narrow host specificity of *C. andersoni* has probably further reduced its genetic diversity. The recent introduction of *C. andersoni* into many areas is supported by the finding of one MLST subtype of *C. andersoni* in the United States, Canada, and the Czech Republic (Table 2 and Fig. 3). In contrast, rodents are abundant and widespread in distribution and consist of numerous species living in diverse ecological niches. The broad host specificity of *C. muris* and the geographical isolation of some rodent species have probably led to the emergence of host-adapted subtypes, as seen for the better-known *C. parvum* (41). Nevertheless, biological differences are known to exist in *C. andersoni*. Isolates of *C. andersoni* in Japan, the so-called strain Kawatabi, differ from *C. andersoni* isolates in other areas in its ability to infect SCID mice (28). The genetic difference between the two biological

Downloaded from http://jcm.asm.org/ on December 18, 2020 at University of North Texas Libraries

TABLE 3. Nature of microsatellite and minisatellite repeats in four genetic loci

Locus	Repeat(s)		
	C. muris	*C. muris* variant	*C. andersoni*
CM-MS1	$(TAAAGGGAGAGA)_3$ and $(GAACGA\ GATAGG)_{14\text{-}18}$	$(TAAAGAGAGAGA)_6$ and $(GAACGAGATAGG)_{14}$	$(TAAAGGGCGAGA)_3$ and $(GAACGAGATAGG)_{13\text{-}14}$
CM-MS2	$(CCATATCCC)_{3\text{-}4}$ and $(CCATACCTC)_3$	$(CCCATTCCT)_4$	$(CCATACCTC)_{10\text{-}11}$
CM-MS3	$(TGTTGG)_{8\text{-}9}$ and $(GCTGCA)_6$	$(TGTTGG)_7$ and $(TGC)_{10}$	$(TGTTGGTGTTGCTGT)_2$ and $(TGCTGCAGCTGC)_{2\text{-}3}$
CM-MS16	$(CTTCTTCAT)_{9\text{-}12}$	$(CTTCTTCAT)_8$	$(CTTCTTCAT)_{14}$

types of *C. andersoni* is not yet clear. Again, the inclusion of more genetic loci and a large number of samples from different geographical areas are needed before we can have a better understanding of the geographical spread of *C. andersoni* and genetic determinants of host specificity.

Among the 18 MLST subtypes identified, 7 were found in multiple specimens. The number of specimens with complete data for all four loci was limited by the fact that some DNA preparations were not amplified at all loci, especially in the initial PCR analysis of the CM-MS3 locus. The reason for the poor initial PCR amplification (only 24 of 44 produced the expected PCR product) of CM-MS3 was due largely to sequencing errors in the primary reverse primer region in the original *C. muris* sequence downloaded from the *C. muris* genome sequencing project. The primer sequence used was 5′-TTGCTTTAAGTGTAGAGCATAGAA-3′. A comparison with the corrected sequence (GenBank accession no. XM_002142635) recently downloaded from the GenBank database indicated that the primers had three nucleotide errors, and the corrected primer sequence should be 5′-TTGCTTTA AGTGTAAATAATACAA-3′. Because the correct primer sequence had a much lower annealing temperature, a new primary reverse primer was designed using a sequence 17 nucleotides downstream of the original location: 5′-TCAAGT ACAGCAGTCTATTGCTT-3′. It is not clear whether the poor amplification efficiency of other loci was also caused by the sequencing errors in the genome sequencing project. More microsatellite and minisatellite targets may also be needed to increase the differentiation power of the MLST tool.

In conclusion, an MLST tool for subtyping *C. muris* and *C. andersoni* was developed. With further refinement, especially the inclusion of more loci, the tool should be useful for the characterization of the population genetics and the dispersal of the two parasites and especially the potential role of either host species or geography in genetic structuring. It should also be useful for the epidemiological investigation of cryptosporidiosis outbreaks caused by *C. muris* in some animals (26) and the public health significance of parasites of animal origin. These studies should analyze a larger number of specimens from more diverse regions and assess the relationship among MLST

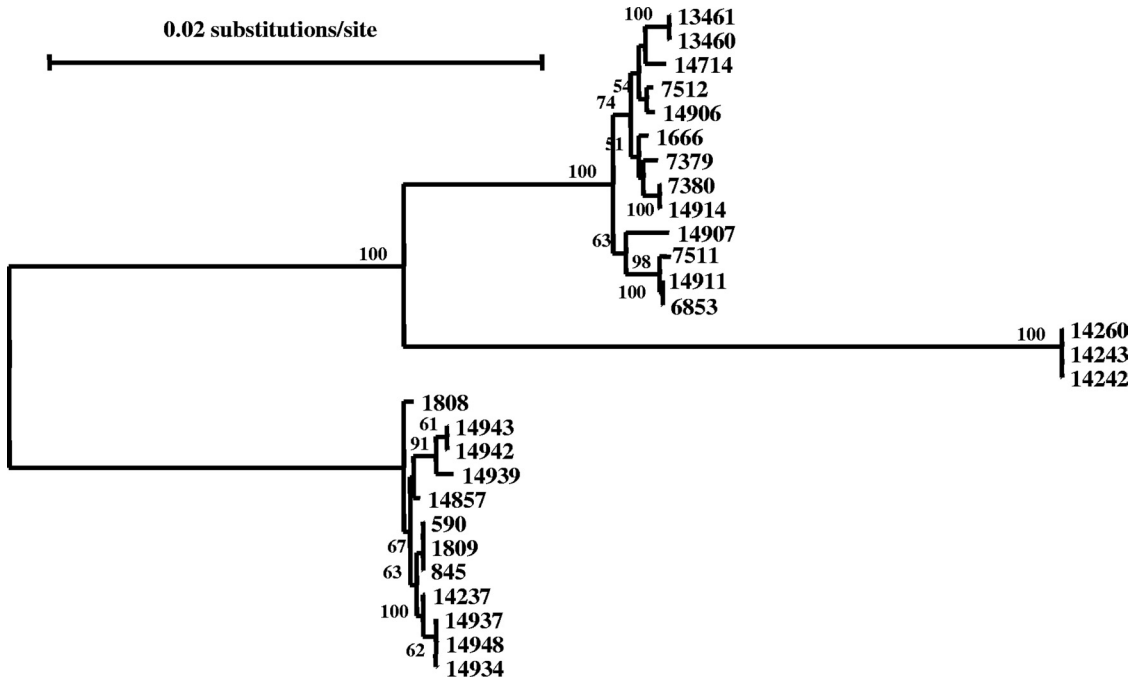

FIG. 3. Phylogenetic relationships among subtypes of *C. muris*, the *C. muris* variant, and *C. andersoni* as assessed by a neighbor-joining analysis of the concatenated nucleotide sequences of four microsatellite and minisatellite loci (MS1, MS2, MS3, and MS16), using distance calculated by the Kimura two-parameter model.

Downloaded from http://jcm.asm.org/ on December 18, 2020 at University of North Texas Libraries

subtypes, host specificity, virulence or clinical presentations, and risk factors.

ACKNOWLEDGMENTS

We thank Wangeci Gatei, Mosaad Hilali, and Carol Palmer for providing specimens.

This work was supported in part by the Shanghai Science and Technology Committee (grant no. 09540704400), the National Natural Science Foundation of China (grant no. 30771881 and 30928019), and Fundamental Research Funds for the Central Universities, China (grant no. WB0914044).

The findings and conclusions in this report are those of the authors and do not necessarily represent the views of the Centers for Disease Control and Prevention.

REFERENCES

1. **Al-Brikan, F. A., H. S. Salem, N. Beeching, and N. Hilal.** 2008. Multilocus genetic analysis of *Cryptosporidium* isolates from Saudi Arabia. J. Egypt. Soc. Parasitol. **38:**645–658.
2. **Beja-Pereira, A., D. Caramelli, C. Lalueza-Fox, C. Vernesi, N. Ferrand, A. Casoli, F. Goyache, L. J. Royo, S. Conti, M. Lari, A. Martini, L. Ouragh, A. Magid, A. Atash, A. Zsolnai, P. Boscato, C. Triantaphylidis, K. Ploumi, L. Sineo, F. Mallegni, P. Taberlet, G. Erhardt, L. Sampietro, J. Bertranpetit, G. Barbujani, G. Luikart, and G. Bertorelle.** 2006. The origin of European cattle: evidence from modern and ancient DNA. Proc. Natl. Acad. Sci. U. S. A. **103:**8113–8118.
3. **Dubey, J. P., J. E. Markovits, and K. A. Killary.** 2002. *Cryptosporidium muris*-like infection in stomach of cynomolgus monkeys (*Macaca fascicularis*). Vet. Pathol. **39:**363–371.
4. **Fayer, R., M. Santin, and J. M. Trout.** 2007. Prevalence of *Cryptosporidium* species and genotypes in mature dairy cattle on farms in eastern United States compared with younger cattle from the same locations. Vet. Parasitol. **145:**260–266.
5. **Fayer, R., M. Santin, J. M. Trout, and E. Greiner.** 2006. Prevalence of species and genotypes of *Cryptosporidium* found in 1-2-year-old dairy cattle in the eastern United States. Vet. Parasitol. **135:**105–112.
6. **Feng, Y., K. A. Alderisio, W. Yang, L. A. Blancero, W. G. Kuhne, C. A. Nadareski, M. Reid, and L. Xiao.** 2007. *Cryptosporidium* genotypes in wildlife from a New York watershed. Appl. Environ. Microbiol. **73:**6475–6483.
7. **Feng, Y., Y. Ortega, G. He, P. Das, M. Xu, X. Zhang, R. Fayer, W. Gatei, V. Cama, and L. Xiao.** 2007. Wide geographic distribution of *Cryptosporidium bovis* and the deer-like genotype in bovines. Vet. Parasitol. **144:**1–9.
8. **Gatei, W., R. W. Ashford, N. J. Beeching, S. K. Kamwati, J. Greensill, and C. A. Hart.** 2002. *Cryptosporidium muris* infection in an HIV-infected adult, Kenya. Emerg. Infect. Dis. **8:**204–206.
9. **Gatei, W., D. Barrett, J. F. Lindo, D. Eldemire-Shearer, V. Cama, and L. Xiao.** 2008. Unique *Cryptosporidium* population in HIV-infected persons, Jamaica. Emerg. Infect. Dis. **14:**841–843.
10. **Gatei, W., P. Das, P. Dutta, A. Sen, V. Cama, A. A. Lal, and L. Xiao.** 2007. Multilocus sequence typing and genetic structure of *Cryptosporidium hominis* from children in Kolkata, India. Infect. Genet. Evol. **7:**197–205.
11. **Gatei, W., J. Greensill, R. W. Ashford, L. E. Cuevas, C. M. Parry, N. A. Cunliffe, N. J. Beeching, and C. A. Hart.** 2003. Molecular analysis of the 18S rRNA gene of *Cryptosporidium* parasites from patients with or without human immunodeficiency virus infections living in Kenya, Malawi, Brazil, the United Kingdom, and Vietnam. J. Clin. Microbiol. **41:**1458–1462.
12. **Gatei, W., C. A. Hart, R. H. Gilman, P. Das, V. Cama, and L. Xiao.** 2006. Development of a multilocus sequence typing tool for *Cryptosporidium hominis*. J. Eukaryot. Microbiol. **53:**S43–S48.
13. **Gatei, W., C. N. Wamae, C. Mbae, A. Waruru, E. Mulinge, T. Waithera, S. M. Gatika, S. K. Kamwati, G. Revathi, and C. A. Hart.** 2006. Cryptosporidiosis: prevalence, genotype analysis, and symptoms associated with infections in children in Kenya. Am. J. Trop. Med. Hyg. **75:**78–82.
14. **Gotherstrom, A., C. Anderung, L. Hellborg, R. Elburg, C. Smith, D. G. Bradley, and H. Ellegren.** 2005. Cattle domestication in the Near East was followed by hybridization with aurochs bulls in Europe. Proc. Biol. Sci. **272:**2345–2350.
15. **Guyot, K., A. Follet-Dumoulin, E. Lelievre, C. Sarfati, M. Rabodonirina, G. Nevez, J. C. Cailliez, D. Camus, and E. Dei-Cas.** 2001. Molecular characterization of *Cryptosporidium* isolates obtained from humans in France. J. Clin. Microbiol. **39:**3472–3480.
16. **Hikosaka, K., and Y. Nakai.** 2005. A novel genotype of *Cryptosporidium muris* from large Japanese field mice, *Apodemus speciosus*. Parasitol. Res. **97:**373–379.
17. **Hurkova, L., O. Hajdusek, and D. Modry.** 2003. Natural infection of *Cryptosporidium muris* (Apicomplexa: Cryptosporiidae) in Siberian chipmunks. J. Wildl. Dis. **39:**441–444.
18. **Iseki, M., T. Maekawa, K. Moriya, S. Uni, and S. Takada.** 1989. Infectivity of *Cryptosporidium muris* (strain RN 66) in various laboratory animals. Parasitol. Res. **75:**218–222.
19. **Katsumata, T., D. Hosea, I. G. Ranuh, S. Uga, T. Yanagi, and S. Kohno.** 2000. Possible *Cryptosporidium muris* infection in humans. Am. J. Trop. Med. Hyg. **62:**70–72.
20. **Kodadkova, A., M. Kvac, O. Ditrich, B. Sak, and L. Xiao.** 2010. *Cryptosporidium muris* in a reticulated giraffe (*Giraffa camelopardalis reticulata*). J. Parasitol. **96:**211–212.
21. **Koudela, B., D. Modry, and J. Vitovec.** 1998. Infectivity of *Cryptosporidium muris* isolated from cattle. Vet. Parasitol. **76:**181–188.
22. **Kvac, M., D. Hanzlikova, B. Sak, and D. Kvetonova.** 2009. Prevalence and age-related infection of *Cryptosporidium suis*, *C. muris* and *Cryptosporidium* pig genotype II in pigs on a farm complex in the Czech Republic. Vet. Parasitol. **160:**319–322.
23. **Kvac, M., B. Sak, D. Kvetonova, O. Ditrich, L. Hofmannova, D. Modry, J. Vitovec, and L. Xiao.** 2008. Infectivity, pathogenicity, and genetic characteristics of mammalian gastric *Cryptosporidium* spp. in domestic ruminants. Vet. Parasitol. **153:**363–367.
24. **Leoni, F., C. Amar, G. Nichols, S. Pedraza-Diaz, and J. McLauchlin.** 2006. Genetic analysis of *Cryptosporidium* from 2414 humans with diarrhoea in England between 1985 and 2000. J. Med. Microbiol. **55:**703–707.
25. **Lindsay, D. S., S. J. Upton, D. S. Owens, U. M. Morgan, J. R. Mead, and B. L. Blagburn.** 2000. *Cryptosporidium andersoni* n. sp. (Apicomplexa: Cryptosporiidae) from cattle, *Bos taurus*. J. Eukaryot. Microbiol. **47:**91–95.
26. **Lupo, P. J., R. C. Langer-Curry, M. Robinson, P. C. Okhuysen, and C. L. Chappell.** 2008. *Cryptosporidium muris* in a Texas canine population. Am. J. Trop. Med. Hyg. **78:**917–921.
27. **Lv, C., L. Zhang, R. Wang, F. Jian, S. Zhang, C. Ning, H. Wang, C. Feng, X. Wang, X. Ren, M. Qi, and L. Xiao.** 2009. Prevalence and molecular characterization of *Cryptosporidium* spp. in wild, laboratory, and pet rodents in China. Appl. Environ. Microbiol. **75:**7692–7699.
28. **Matsubayashi, M., I. Kimata, M. Iseki, T. Hajiri, H. Tani, K. Sasai, and E. Baba.** 2005. Infectivity of a novel type of *Cryptosporidium andersoni* to laboratory mice. Vet. Parasitol. **129:**165–168.
29. **Morgan, U. M., L. Xiao, P. Monis, I. Sulaiman, I. Pavlasek, B. Blagburn, M. Olson, S. J. Upton, N. V. Khramtsov, A. Lal, A. Elliot, and R. C. Thompson.** 2000. Molecular and phylogenetic analysis of *Cryptosporidium muris* from various hosts. Parasitology **120:**457–464.
30. **Morse, T. D., R. A. Nichols, A. M. Grimason, B. M. Campbell, K. C. Tembo, and H. V. Smith.** 2007. Incidence of cryptosporidiosis species in paediatric patients in Malawi. Epidemiol. Infect. **135:**1307–1315.
31. **Muthusamy, D., S. S. Rao, S. Ramani, B. Monica, I. Banerjee, O. C. Abraham, D. C. Mathai, B. Primrose, J. Muliyil, C. A. Wanke, H. D. Ward, and G. Kang.** 2006. Multilocus genotyping of *Cryptosporidium* sp. isolates from human immunodeficiency virus-infected individuals in South India. J. Clin. Microbiol. **44:**632–634.
32. **Ng, J., I. Pavlasek, and U. Ryan.** 2006. Identification of novel *Cryptosporidium* genotypes from avian hosts. Appl. Environ. Microbiol. **72:**7548–7553.
33. **Palmer, C. J., L. Xiao, A. Terashima, H. Guerra, E. Gotuzzo, G. Saldias, J. A. Bonilla, L. Zhou, A. Lindquist, and S. J. Upton.** 2003. *Cryptosporidium muris*, a rodent pathogen, recovered from a human in Peru. Emerg. Infect. Dis. **9:**1174–1176.
34. **Pavlasek, I., and U. Ryan.** 2007. The first finding of a natural infection of *Cryptosporidium muris* in a cat. Vet. Parasitol. **144:**349–352.
35. **Plutzer, J., and P. Karanis.** 2009. Genetic polymorphism in *Cryptosporidium* species: an update. Vet. Parasitol. **165:**187–199.
36. **Ryan, U., L. Xiao, C. Read, L. Zhou, A. A. Lal, and I. Pavlasek.** 2003. Identification of novel *Cryptosporidium* genotypes from the Czech Republic. Appl. Environ. Microbiol. **69:**4302–4307.
37. **Santin, M., B. R. Dixon, and R. Fayert.** 2005. Genetic characterization of *Cryptosporidium* isolates from ringed seals (*Phoca hispida*) in Northern Quebec, Canada. J. Parasitol. **91:**712–716.
38. **Santin, M., J. M. Trout, J. A. Vecino, J. P. Dubey, and R. Fayer.** 2006. *Cryptosporidium*, *Giardia* and *Enterocytozoon bieneusi* in cats from Bogota (Colombia) and genotyping of isolates. Vet. Parasitol. **141:**334–339.
39. **Tiangtip, R., and S. Jongwutiwes.** 2002. Molecular analysis of *Cryptosporidium* species isolated from HIV-infected patients in Thailand. Trop. Med. Int. Health **7:**357–364.
40. **Warren, K. S., R. A. Swan, U. M. Morgan-Ryan, J. A. Friend, and A. Elliot.** 2003. *Cryptosporidium muris* infection in bilbies (*Macrotis lagotis*). Aust. Vet. J. **81:**739–741.
41. **Xiao, L.** 2010. Molecular epidemiology of cryptosporidiosis: an update. Exp. Parasitol. **124:**80–89.
42. **Xiao, L., L. Escalante, C. Yang, I. Sulaiman, A. A. Escalante, R. J. Montali, R. Fayer, and A. A. Lal.** 1999. Phylogenetic analysis of *Cryptosporidium* parasites based on the small-subunit rRNA gene locus. Appl. Environ. Microbiol. **65:**1578–1583.
43. **Xiao, L., I. M. Sulaiman, U. M. Ryan, L. Zhou, E. R. Atwill, M. L. Tischler, X. Zhang, R. Fayer, and A. A. Lal.** 2002. Host adaptation and host-parasite co-evolution in *Cryptosporidium*: implications for taxonomy and public health. Int. J. Parasitol. **32:**1773–1785.
44. **Zintl, A., D. Neville, D. Maguire, S. Fanning, G. Mulcahy, H. V. Smith, and T. De Waal.** 2007. Prevalence of *Cryptosporidium* species in intensively farmed pigs in Ireland. Parasitology **134:**1575–1582.

Downloaded from http://jcm.asm.org/ on December 18, 2020 at University of North Texas Libraries